Design Modification and Analysis of Electrically Operated Screw Jack for Light Motor Vehicles

Shashikant A. Pekhale[1], Prof. S. V. Karanjkar[21]*Reserach Scholar, Mechanical Engineering Department, MET's Institute of Engineering, Bhujbal Knowledge City , Nashik pekhale.shashikant3@gmail.com*[2]*Assistant Professor, Mechanical Engineering Department,MET's Institute of Engineering Bhujbal Knowledge City ,Nashik skushann@gmail.com*

Abstract- **Side road emergency like tire puncher, is a problem commonly observed in cars. Conventional car jacks uses mechanical advantage to allow a human to lift a vehicle by manual force. This paper analyzes the modification of the current toggle jack by incorporating an electric DC motor in the screw in order to make load lifting easier for emergency use with using power of car batter (12 Volts). Gear ratio is used to increase the lifting power. The significance and purpose of this work is to modify the existing car jack in order to make the operation easier, safer and more reliable in order to save individual internal energy and reduce health risks especially back ache problems associated with doing work in a bent or squatting position for a long period of time. The car jack is developed using CATIA V5R19 and analyzed using Finite Element Analysis to check safety factor and force acting. Fabrication work has been done using with milling, drilling, grinding, and welding machine. The developed car jack is tested on car. Implementation of design will solve problem associated with ergonomics.**

Keywords-**Car battery, CATIA, D.C motor, ergonomics, gear ratio, jack, screw**

I. INTRODUCTION

Toggle jack is used to jack the car during side road emergency i.e. tire puncher. A mechanical jack is a device used to lift heavy equipment, all or part of a vehicle into the air in order to facilitate vehicle maintenances or breakdown repairs [Budynas, and Nisbett, 2008]. Changing a flat tire is not a very pleasant experience. Nowadays, a variety of car jacks have been developed for lifting an automobile from a ground surface. Available car jacks, however, are typically manually operated and therefore require substantial laborious physical effort on the part of the user. Such jacks present difficulties for the elderly and handicapped [ACCC, 2007]. It further requires the operator to remain in prolonged bent or squatting position to operate the jack. Doing work in a bent or squatting position for a period of time is not ergonomic to human body. It will give back ache problem in due of time.

A toggle jack is operated by turning a lead screw. In this case of a jack, a small force applied in the horizontal plane is used to raise or lower large load [Khurmi and Gupta, 2005]. A jackscrew's compressive force is obtained through the tension force applied by its lead screw. An Acme thread is most often used, as this thread is very strong and can resist the large loads imposed on most jackscrews while not being weakened by wear over many rotations. An inherent advantage is that, if the tapered sides of the screw wear, the mating nut automatically comes into closer engagement, instead of allowing backlash to develop [Rajput, 2007]. These types are self-locking, which makes them safer than other jack technologies like hydraulic actuators which require continual pressure to remain in a locked position.

The automobile service stations are commonly equipped with large and hi-tech car lift, wherein such lifts are raised and lowered via electrically-powered systems [BJC, 2008]. However, due to their size and high costs of purchasing and maintaining, such lifts are not feasible to be placed in car and owned by car owner. Such electrical-powered portable jacks not only reduce the effort required for lifting an automobile via manually-operated jacks, but also decrease the time needed to repair the automobile. Such a feature can be especially advantageous when it is necessary to repair an automobile on the side of a roadway or under other hazardous conditions [Lonon, 2007].

A specified jack purposed to hold up to 1000 kilograms, but tests undertaken by Consumer Affairs has revealed that is fails to work after lifting 250 kilograms and may physically break when it has a weight close to its 1000 kilograms capacity [BJC,

2008]. Tests have proven that the jack has the tendency to buckle under the weight it is subjected to withstand [Razzaghi and Douglasville, 2007]. The purpose of this project is to develop a car jack which is easy to be operated, safe and able lift and lowering the car without involving much physical effort. This paper discussed the design and analysis of modified car jack.

II. LITERATURE REVIEW

Before working on project it was necessary to understand the details about any inventions or innovations or development in following products and technology or mechanism that can be used. The following patents are studied:

1. Research by Edward M.Lonnon.
2. Research by FarhadRazzaghi.
3. Research by Emil Mickael.
4. Research by Leo F. Carder.

Research by Leo F. Carder
Patent number: US7988131B1
Date of Patent: Aug 2, 2012
Name of patent: Electric scissor jack apparatus

The electric scissor jack apparatus uses electrical power to elevate an automobile with a cigar lighter plug of an auto to power the high torque electric motor of the apparatus shown in Fig 1. The motor is in communication with the scissor jack via the gear reduction member so that maximum torque is applied to the scissor jack shown in Fig 2. of significant importance is that the fail-safe coupling between the gear reduction drive and the scissor jack ensures against excessive or premature wear, failure, and danger to an operator. By avoiding any jack encasement, the apparatus provides for inexpensive multiple jack size utilization in that various sizes of scissor jacks are optionally fitted to the coupling housing of the gear reduction member.

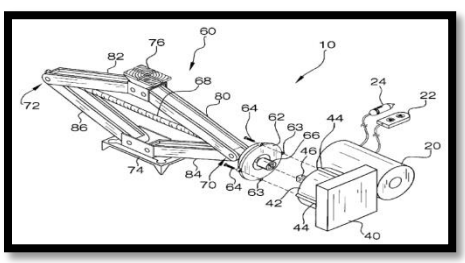

Fig 1: Perspective View of electric scissor jack.

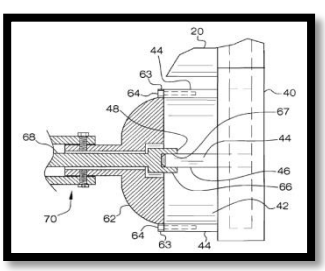

Fig 2: Top cross-sectional view of the coupling housing and coupling mate.

III. WORKING OF ELECTRICALLY OPERATED JACK

Under working condition the jack will lift a vehicle chassis in contact with the top plate when the power screw is rotated through its connecting gear with the pinion when electrical power applied to the wiper motor when plugged to the 12V battery in car. Motor transmits its rotating speed to the pinion gear meshing with the bigger gear connected to the power screw to be rotated with required speed reduction and increased torque to drive the power screw. The power screw rotates within the threaded bore of side member in the clockwise direction that will cause the links to be drawn along the threaded portion towards each other during load-raising process and vice versa. Initially the jack will first be placed below the chassis to be lifted such that at least a small clearance space will exist between the top plate and the vehicle chassis to be raised. Then after power screw will be turned so that the top plate makes contact with the car chassis and the clearance space is eliminated. As contact is made, load of car will be increasingly shifted to the top plate and cause forces to be developed in and transmitted through links and side member. The force transmitted through the side member will be transferred on threads of screw. A switching circuit connected to the motor is used to regulate the lifting and lowering process.

IV. MATERIAL SELECTION

Scissor jacks are usually made of materials that are very strong and are suitable for withstanding heavy loads. The two main materials used for making good quality jacks are Steel and Aluminum. When selecting the material suitable for the construction of the Scissor jack one has to consider the properties that will enable it to function with no expected failure and at the same time the weight and ease of machining the product. Therefore the main areas that can be classified in this case are the strength of the material, weight, ease

and cost of manufacturing. Aluminium is around one-third the density of steel at 2.72 mg/m cubed compared to steel's 7.85 mg/m cubed. The light weight and low melting point of aluminium makes it easier and more efficient to machine than steel. Aluminium's fatigue performance is half that of steel, which is an advantage steel has over aluminium in car jack life durability. Therefore Steel is the most viable material selected for the manufacture of the car scissor jack. (Comparison on basis of data given in materials and heat treatment processes by o.p. khanna). Component number 4, 5and 17will all use the High Strength Low-Alloy Steel (40Ni2Cr1Mo28 / AISI 4340), material is selected on bases of application. Material Property is given in Table 1 below.

Table 1 Material property

Tensile Strength, Ultimate	931 MPa	135000 psi	
Tensile Strength, Yield	834 MPa	121000 psi	
Elongation at Break	20.2 %	20.2 %	
Modulus of Elasticity	205 GPa	29700 ksi	Typical for steel
Bulk Modulus	140 GPa	20300 ksi	Typical for steel
Poisson's Ratio	0.29	0.29	Calculated
Shear Modulus	80 GPa	11600 ksi	

Component number 7, 13 and 16will all use the High Alloy steel plates (N8). . Material Property is given in Table 2 below.

Table 2 Material property

Steel plate/ Sheet thickness / mm	σb MPA	σs ≥/ MPA	δ Samples from the standard for 50 mm (2 in)	180 ° of cold bending test	
				longitudinal	horizontal
Hot-rolled/ Cold rolling: 5 - 150	520	415	16～18	2a	3.5a

Component number 11 will use the Mild steel/ plain carbon steel (C45/ AISI 1045) and 15 will use the Mild steel/ plain carbon steel (C35 Mn75/IS new: 35C8/ AISI 1035, *http://www.btss.in/technical.php*). Material Property of C45 and C35 Mn75 are given in Table 3 below.

Table 3 Material property

Parameter	Pinion	Gear
Material	C45	C35Mn75
Tensile strength, (σ_t)	670 N/mm^2	600 N/mm^2
BHN	229	223
Elastic modulus, (E)	210 GP_a	190 GP_a

PSG Design data book.

V. ANALYSIS

This section shows the details of Finite Element Analysis of this developed prototype. The Finite Element Method is the easy technique to the theoretical method to find out the stress developed in various components of toggle jack. In this paper Finite Element Analysis is carried out in ANSYS Workbench 11 to determine the maximum stress in toggle jack and gear when applied with boundary conditions. Also the deformation is found out for jack and gear pair.

A. Steps in analysis

a. Step 1: Import geometry

Figure 1 show CATIA model imported in Ansys.

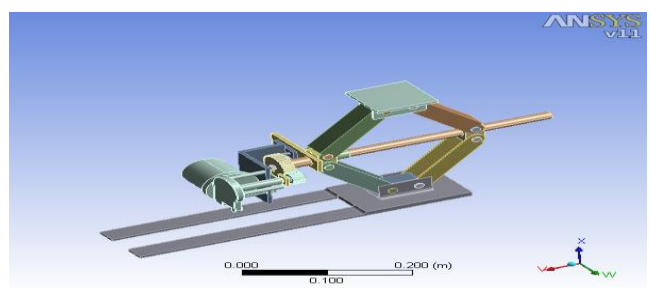

Fig. 1: 3-D geometry of scissor jack

b. Step 2: Meshing

Figure 2 shows the component meshing. Cores meshing of geometry are performed.

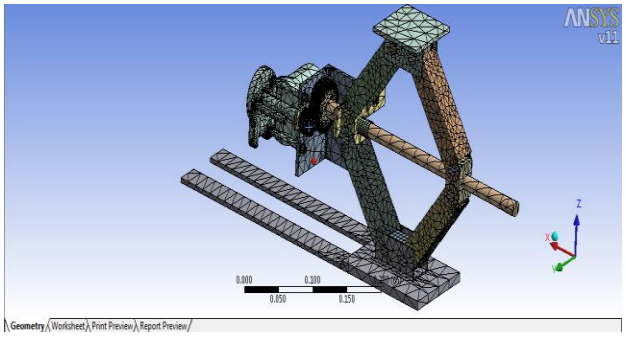

Fig.2:Coarse mesh of scissor jack

c. Step 3: Boundary conditions:

Stabilizer base is fixed as per required initial condition. The load of 5000 N is applied on top plate of jack in geometry. Fixed support is applied on inner rim of the pinion. Frictionless support is applied on inner rim of gear to allow its tangential rotation but restrict radial translation. Moment of 13 N-m is applied on outer rim of pinion in clockwise direction as a driving torque. Figure 3(a) and 3(b) shows applied boundary conditions.

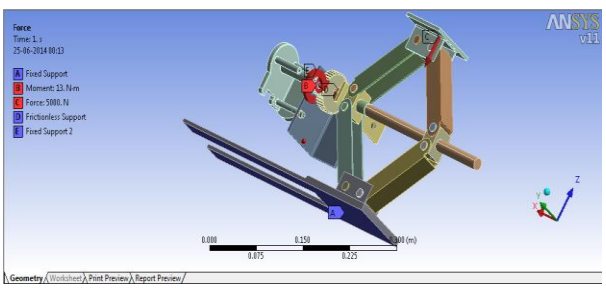

Fig. 3(a): Boundary conditions.

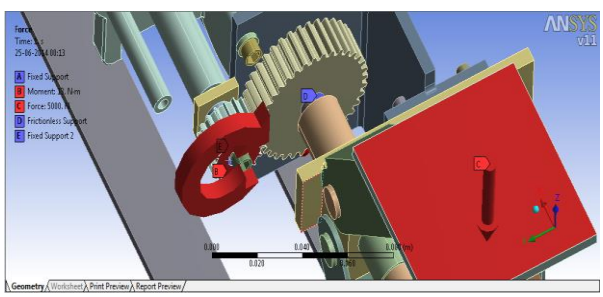

Fig. 3(b): Boundary conditions.

VI. RESULTS

The design was focused on all the processes of conception, visualization, calculation, refinement and specification of details that determine the form of the product. Hence, the said electrically operated toggle jack for Vehicles, specifically the Scissors type has gone under force analysis so that its performance criterion will not fail in any sense. The main physical parameters of the design are determined through the appropriate calculations and practical considerations with reasonable assumptions. From the force and stress diagram in figure, it was discovered that at the maximum raising height of 240mm of the horizontal Tensile force in the opposite direction are the same. It is also the same for the minimum raising height of 115mm. Mild steel is used as the materials for both gears due to its high strength, toughness, tooth hardness and its economical effects.

Based on the analysis on Finite Element Analysis, it shows that the maximum nodal displacement magnitude on the system car jack is around 0.087974 mm as shown in Figure 7.1 when maximum load (5000 N) applied Furthermore, it observed that maximum Von Misses stress, maximum principle stress, maximum shear stress and shear stress values in safe point because analyzed <σy since tensor stress for all material used. Compression between analyzed and allowable material value of stress are in Table 4 below.

Table 4 Stress comparison table

Parameter	Analytical	Allowable (Jack)	Allowable (Gear)	Safety
Von-miss stress	135.06 *N/mm*	173.75 N/mm	400 *N/mm*	Safe
Max. Principle stress.	145.33 *N/mm*	173.75 *N/mm*	400 *N/mm*	Safe
Max shear stress	71.57 *N/mm*	86.875 *N/mm*	200 *N/mm*	Safe

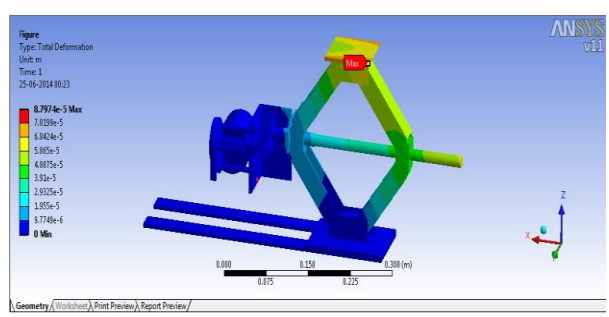

Fig. 4: Deformation pattern for jack.

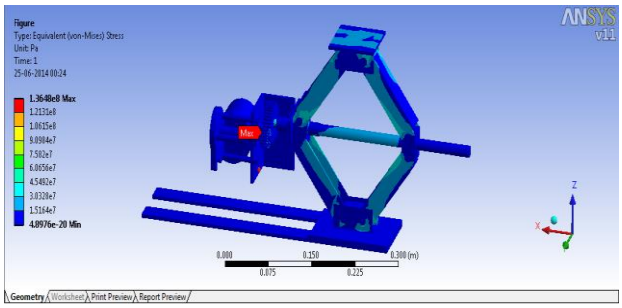

Fig. 5: Von Miss Stress distribution.

VII. CONCLUSION

The existing jack was modified by making small alteration and making use of an electric motor to drive power screw, connecting gear with the pinion mounted on the motor shaft. The automobile 12V battery source operates prime mover (motor), to facile load lifting easier. The power screw is rotated through its gear when electrical power flows through it. The advantages of this jack is it will save time, be faster and easier to operate and requires less human energy and additional work to operate. There by effectively curb the problems associated with Ergonomics - which is a fundamental concept of design process.

Considering all available car jacks in the market, this prototype can be improved by a few modifications on the features and design. The objectives are to design a car jack that is safe, reliable and able to raise and lower the level, to develop a car jack that is powered by internal car power and automated with buttons system.

Based on the testing and results from the analysis, it is considered safe to use Jack car work under certain specifications. Furthermore the torque supplied on the system is more than enough to lift a car weight around 1200 kg. There are certain weak point that can be improved based on gear, motor and design.

VIII. PROPOSED WORK .

Validation of the work from the organization is remaining

REFERENCES

[1]. Patel Nitinchandra R., DalwadiSanketkumar, Thakor Vijay, BamaniyaManish.Design of toggle jack considering material selection of scerw – nut combination, *International Journal of Innovative Research in Science, Engineering and Technology*, May 2013 (2), pp 1-9.

[2]. Noor M. M., Kadirgama K., Rahman M. M., analysis of auto car jack, *National Conference in Mechanical Engineering Research and Postgraduate Student, Malaysia*, 26-27 May 2010 (1), pp 198-203.

[3]. Noor M. M., Kadirgama K., Rahman M. M., Sani M. S. M., Rejab M. R. M.,Development of Auto Car Jack Using Internal Car Power, *Malaysian Science and Technology Congress, Malaysia*, 16-17 Dec 2008 (1), pp 1-6.

[4]. Akinwonmi A. S. and Mohammed A., Modification of the Existing Design of a Car Jack, *Scholarlink Research Institute Journals*, 2012 (4), pp 1-8.

[5]. Khurmi R.S., Gupta J.K., Machine Design Book, 4th ed., S. Chand & company ltd, New Delhi, 3 july 2005, pp 549-583, 602-630.

PekhaleShashikant Anilhave completedBachelor's Degree from Matoshree College of Engineering and Research Center, Nashik. Now pursuingME Degree in Mechanical eering from MET's Institute of Engineering, BKC, Nashik.
Email: pekhale.shashikant@gmail.com

Prof. S. V. Karanjkaris working in MET's Institute of Engineering, BKC Nashik. He has published/presented research papersin National and International Journals/Conferences. Her area ofinterest is Design.
Email: skushann@gmail.com